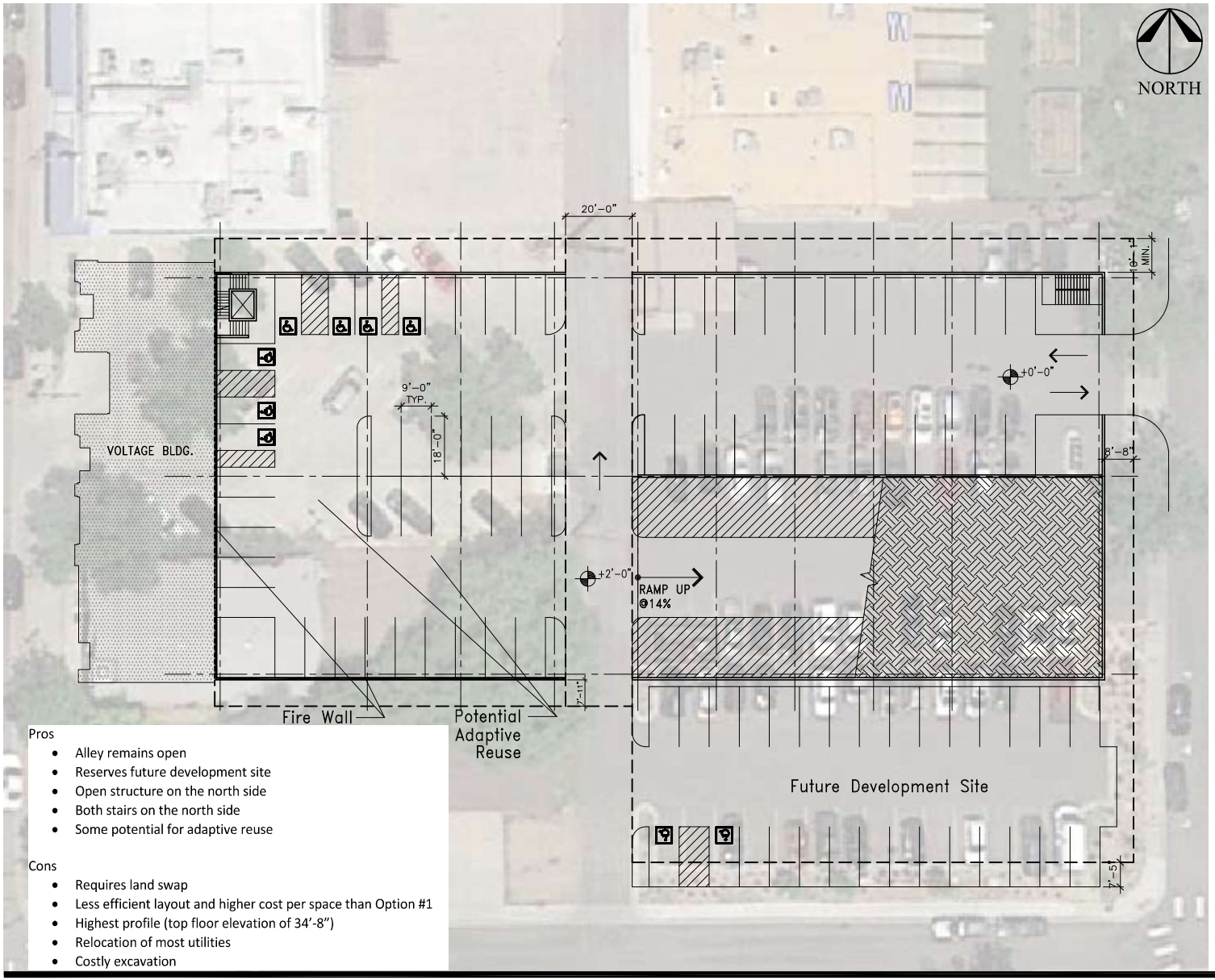

Pros

- Alley remains open
- Reserves future development site
- Open structure on the north side
- Both stairs on the north side
- Some potential for adaptive reuse

Cons

- Requires land swap
- Less efficient layout and higher cost per space than Option #1
- Highest profile (top floor elevation of 34'-8")
- Relocation of most utilities
- Costly excavation

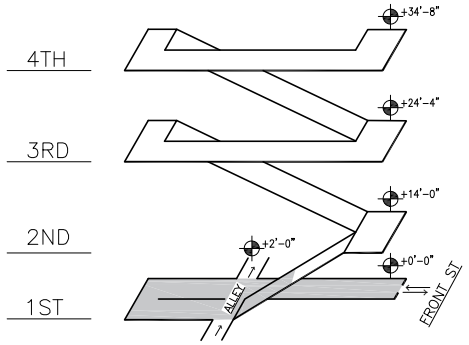

ISOMETRIC DIAGRAM

NORTH

MINIMUM 14'-6" CLEARANCE AT ALLEY

OPTION #2 CONSTRUCTION COST SUMMARY (HARD COST)

Square Feet	Garage or Surface Lot	Cost Per Sq. Ft.	Estimated Cost	Number of Spaces	Cost Per Space
100,400	Garage	$80.00	$8,032,000	287	$27,986
8,500	Surface Lot	$14.00	$119,000	29	$4,103

Note: Cost to relocate utilities is not included in construction cost estimate.

PARKING SPACE TABULATION

Level	Standard	Accessible	Total	Net Gain
Existing	94	3	97	-----
1	56	7	63	-34
2	101	0	101	101
3	106	0	106	106
4	17	0	17	17
Garage Total	280	7	287	190
Surface	27	2	29	29
Grand Total	307	9	316	219

100,400 Total SF = 350 SF/Space for 287 Garage Spaces

Louisville Parking Garage

Concept #2 (East-West Orientation)

Site Plan & Level 1 Parking Plan

DESMAN Design Management

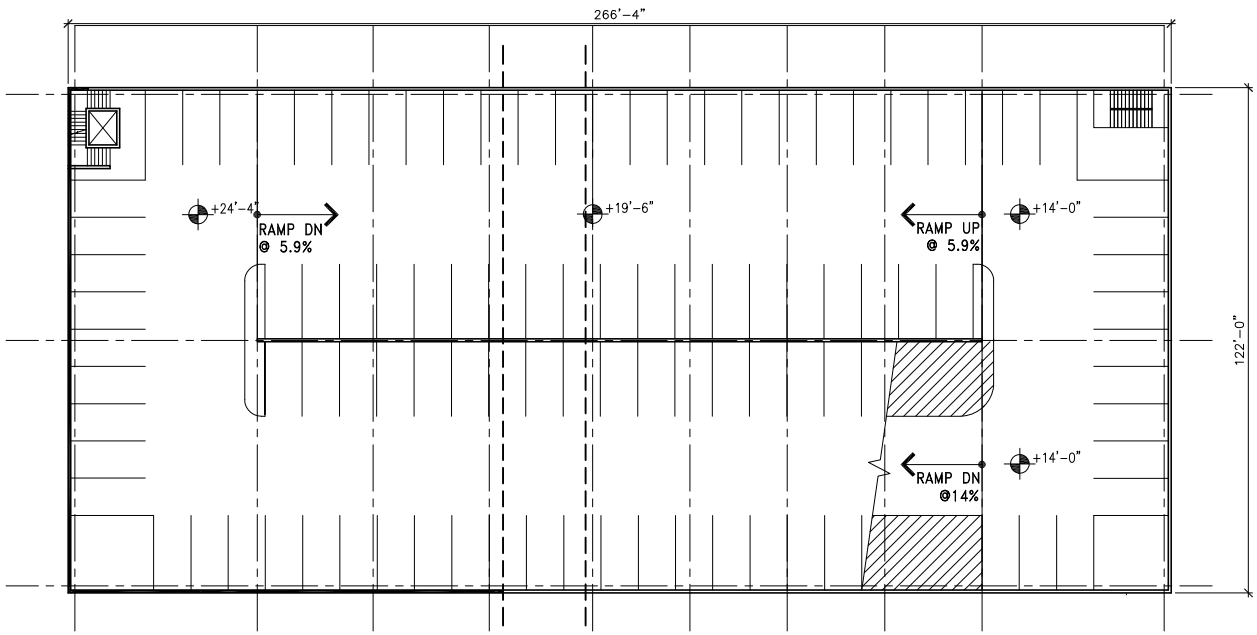

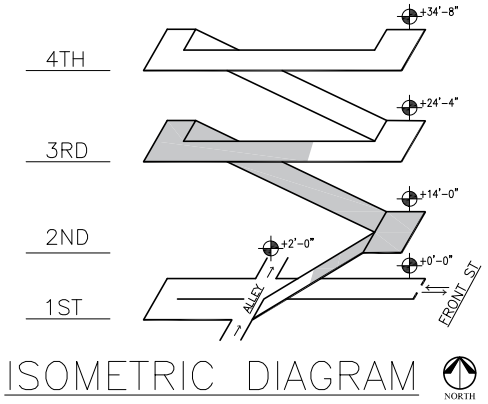

PARKING SPACE TABULATION

Level	Standard	Accessible	Total	Net Gain
Existing	94	3	97	-----
1	56	7	63	-34
2	101	0	101	101
3	106	0	106	106
4	17	0	17	17
Garage Total	280	7	287	190
Surface	27	2	29	29
Grand Total	307	9	316	219

100,400 Total SF = 350 SF/Space for 287 Garage Spaces

Louisville Parking Garage

Concept #2 (East-West Orientation)

Level 2 Parking Plan

DESMAN Design Management

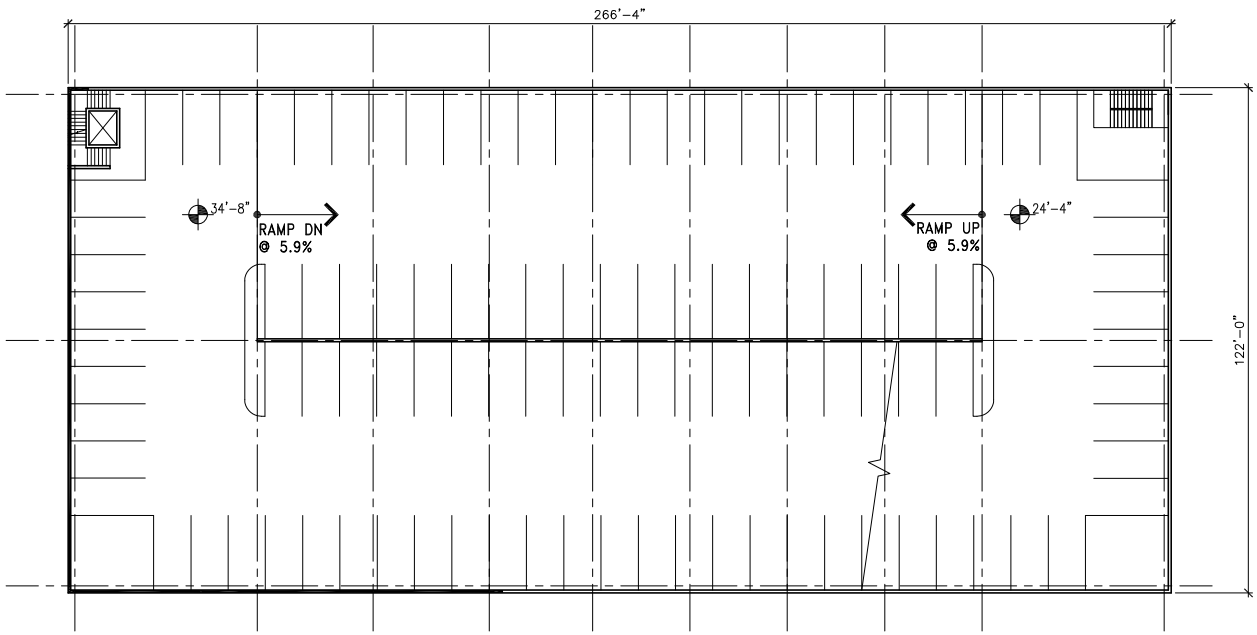

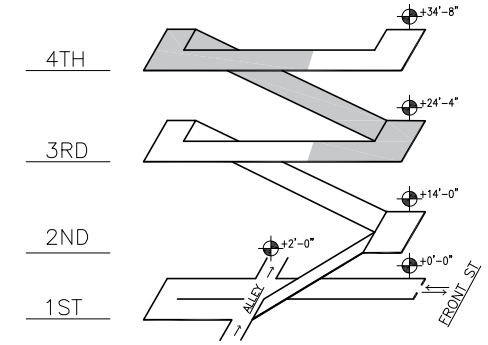

ISOMETRIC DIAGRAM

NORTH

PARKING SPACE TABULATION

Level	Standard	Accessible	Total	Net Gain
Existing	94	3	97	-----
1	56	7	63	-34
2	101	0	101	101
3	106	0	106	106
4	17	0	17	17
Garage Total	280	7	287	190
Surface	27	2	29	29
Grand Total	307	9	316	219

100,400 Total SF = 350 SF/Space for 287 Garage Spaces

Louisville Parking Garage

Concept #2 (East-West Orientation)

Level 3 Parking Plan

DESMAN
Design Management

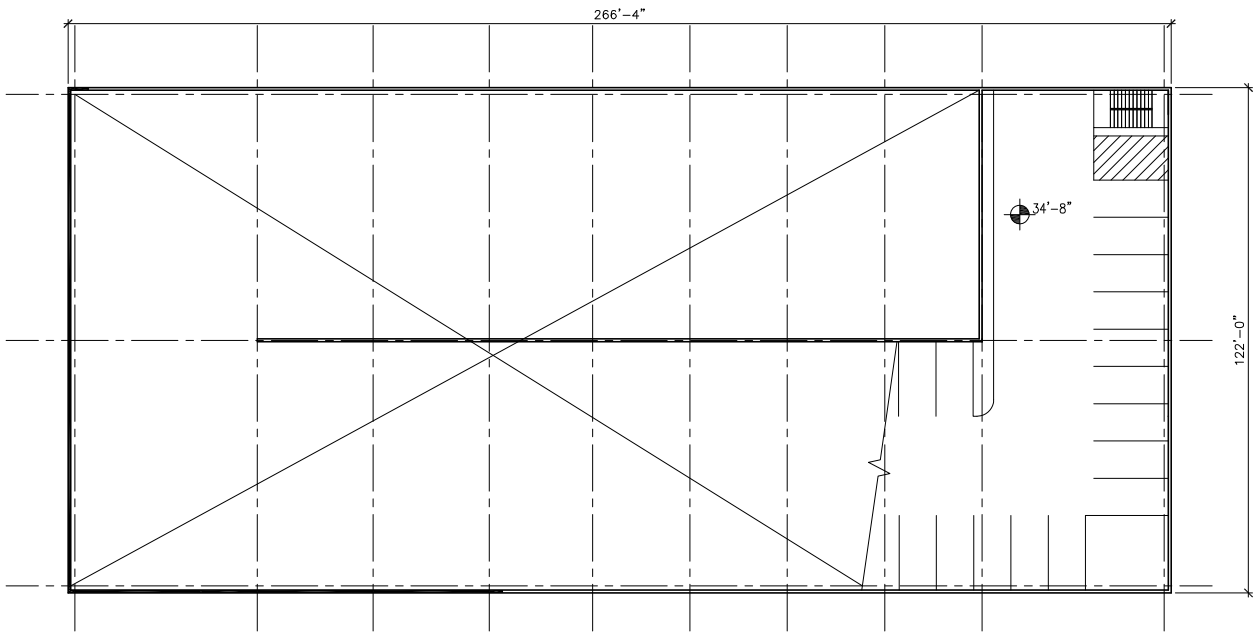

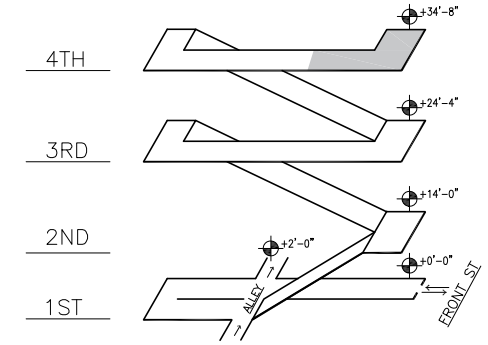

ISOMETRIC DIAGRAM

NORTH

PARKING SPACE TABULATION

Level	Standard	Accessible	Total	Net Gain
Existing	94	3	97	----
1	56	7	63	-34
2	101	0	101	101
3	106	0	106	106
4	17	0	17	17
Garage Total	280	7	287	190
Surface	27	2	29	29
Grand Total	307	9	316	219

100,400 Total SF = 350 SF/Space for 287 Garage Spaces

Louisville Parking Garage

Concept #2 (East-West Orientation)

Level 4 Parking Plan

DESMAN Design Management

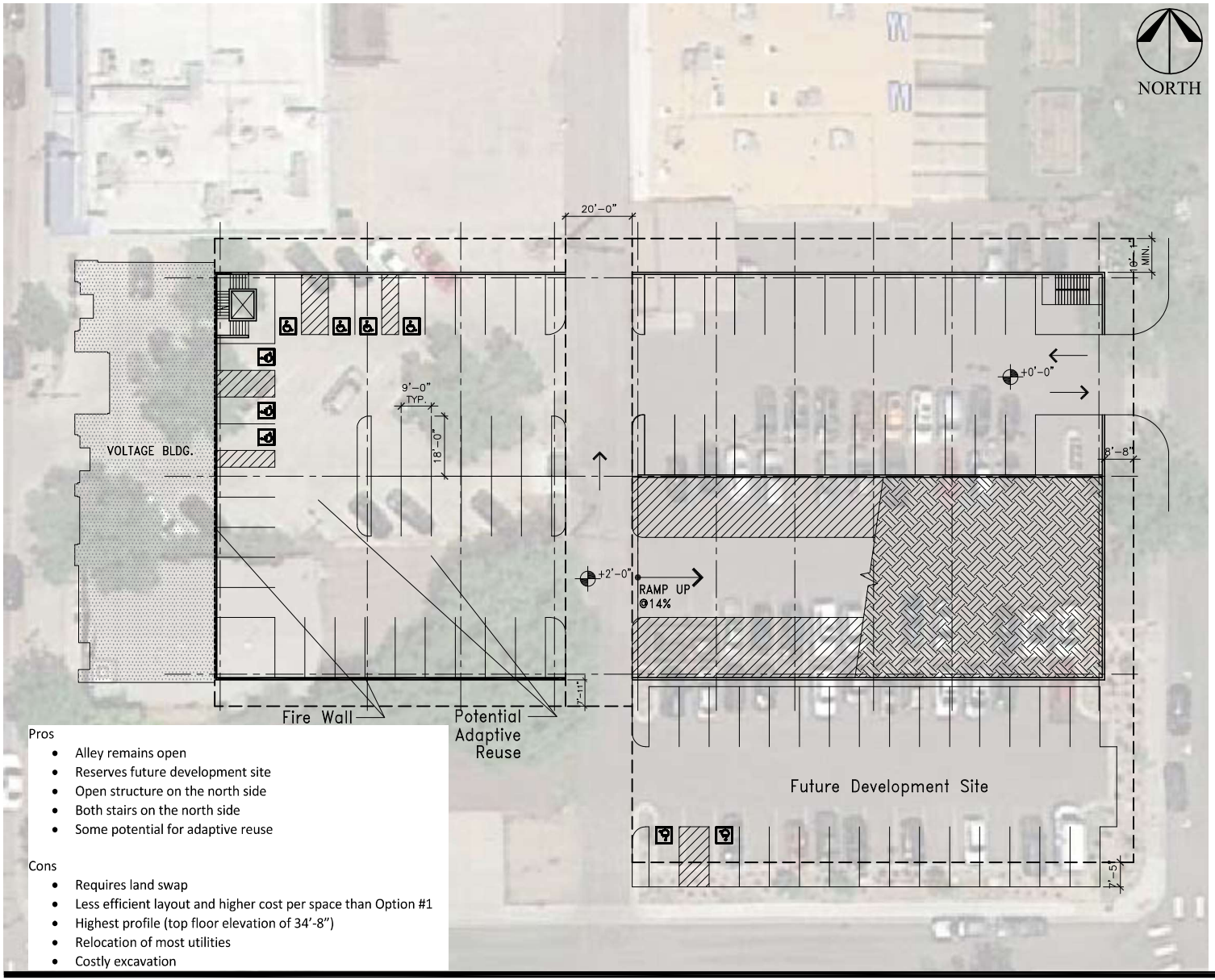

Pros

- Alley remains open
- Reserves future development site
- Open structure on the north side
- Both stairs on the north side
- Some potential for adaptive reuse

Cons

- Requires land swap
- Less efficient layout and higher cost per space than Option #1
- Highest profile (top floor elevation of 34'-8")
- Relocation of most utilities
- Costly excavation

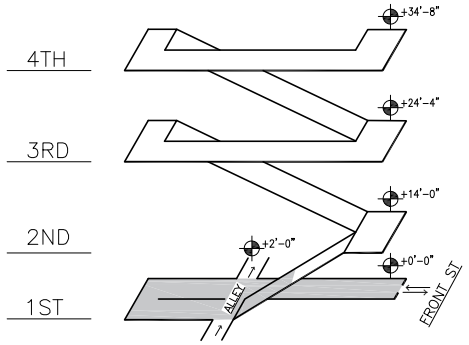

ISOMETRIC DIAGRAM

NORTH

MINIMUM 14'-6" CLEARANCE AT ALLEY

OPTION #2 CONSTRUCTION COST SUMMARY (HARD COST)

Square Feet	Garage or Surface Lot	Cost Per Sq. Ft.	Estimated Cost	Number of Spaces	Cost Per Space
100,400	Garage	$80.00	$8,032,000	287	$27,986
8,500	Surface Lot	$14.00	$119,000	29	$4,103

Note: Cost to relocate utilities is not included in construction cost estimate.

PARKING SPACE TABULATION

Level	Standard	Accessible	Total	Net Gain
Existing	94	3	97	-----
1	56	7	63	-34
2	101	0	101	101
3	106	0	106	106
4	17	0	17	17
Garage Total	280	7	287	190
Surface	27	2	29	29
Grand Total	307	9	316	219

100,400 Total SF = 350 SF/Space for 287 Garage Spaces

Louisville Parking Garage

Concept #2 (East-West Orientation)

Site Plan & Level 1 Parking Plan

DESMAN Design Management

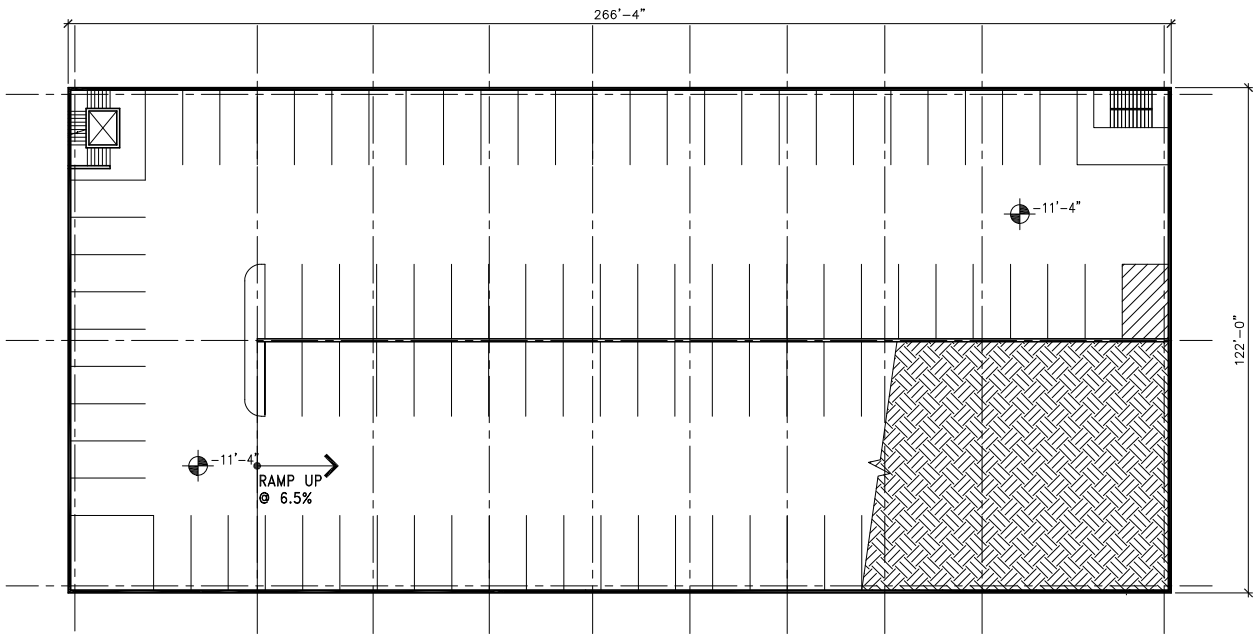

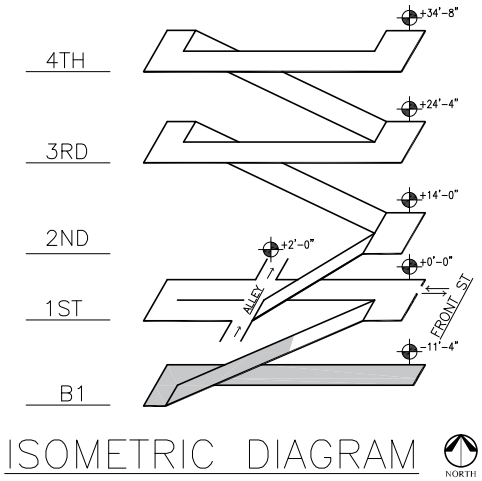

PARKING SPACE TABULATION

Level	Standard	Accessible	Total	Net Gain
Existing	94	3	97	----
B1	93	0	93	93
1	66	8	74	-23
2	101	0	101	101
3	106	0	106	106
4	17	0	17	17
Garage Total	383	8	391	294
Surface	27	2	29	29
Grand Total	410	10	420	323

132,900 Total SF = 340 SF/Space for 391 Garage Spaces

Louisville Parking Garage

Concept #2A (East-West Orientation)

Alternate Level B1 Parking Plan

DESMAN
Design Management

34th St